HISAKA

Plate Heat Exchanger
2 Operation and Maintenance Manual

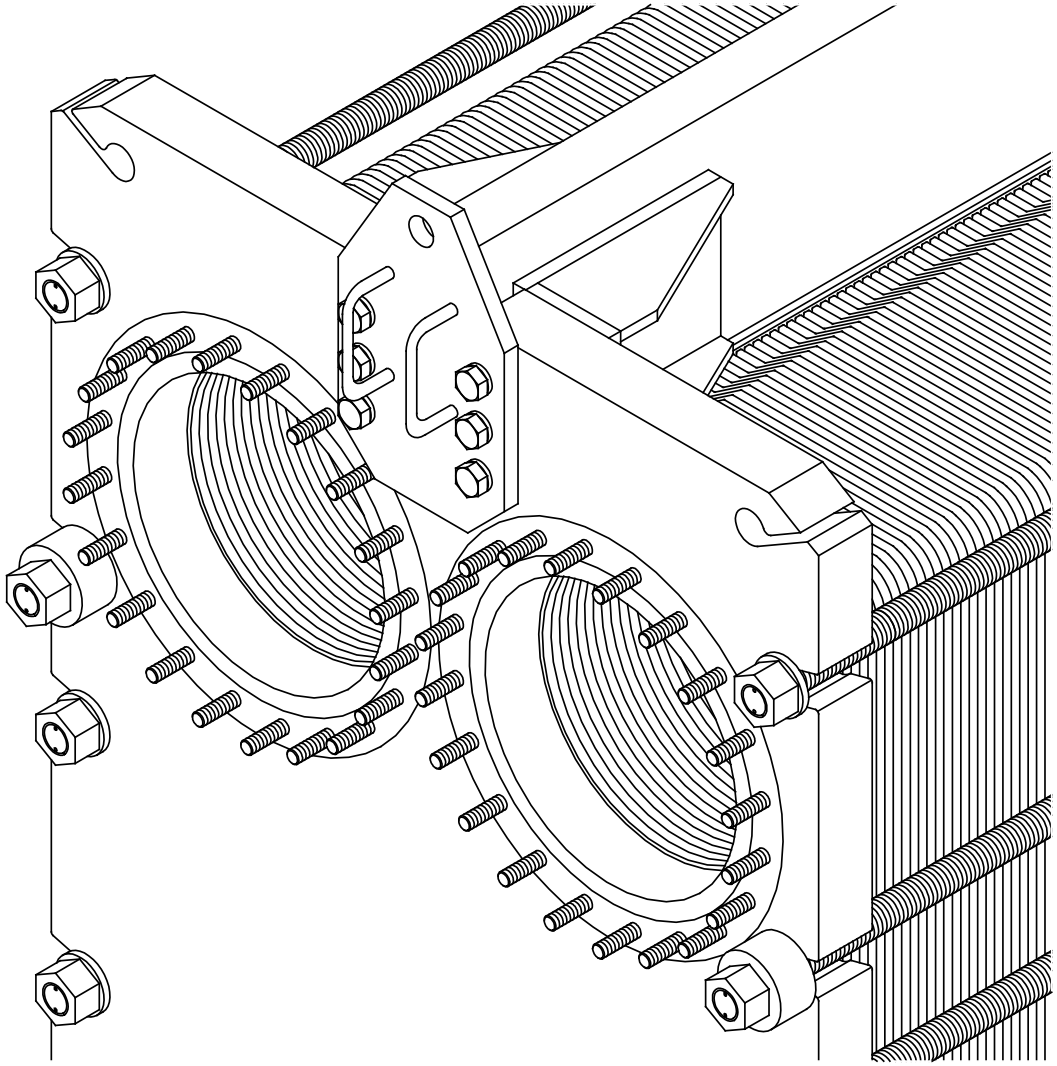

Thank you for purchasing a Hisaka Plate Heat Exchanger.

- Manuals for the HISAKA Plate Heat Exchanger consist of the following seven related documents.
  1. Installation Manual, 2. Operation and Maintenance Manual, 3. Gasketting Manual, 4. Plate Cleaning Manual, 5. "Slit-In" & “Hook-Lock” Type Gasketting Manual, 6. Mixed Gasket Materials Manual, and 7. Strainer Maintenance Manual.
  These documents are available at our website (https://www.hisaka.co.jp/english/).
- Drawings (Plate Arrangement Drawing and Assembly Drawing) of supplied model are to be supplied with the equipment.
- Use as directed in these Manuals for safe and proper operation and maintenance.
- Keep these Manuals in hand.
- All description details, including appearance and specifications, presented in this manual are subject to change for improvement without prior notice. For the latest information, please refer to our website, if necessary.

Introduction

<Plate Heat Exchanger>

- Plate Heat Exchanger (hereinafter “PHE”) performs heat exchanging by transferring heat between hot and cold fluids flowing alternately through heat transfer plates, which are thin metal sheets having fine corrugated patterns.

<Use of Equipment>

- To prevent injury to persons, do not use the equipment for anything other than its intended purpose and specification. Also, installation and maintenance shall be carried out according to these Manuals.

<Trained Operators>

- Operation, maintenance/inspection, or installation of the equipment shall be performed by personnel/operators who have undergone training regarding safety and danger prevention drills.
- Work in high places shall be performed by personnel/operators who have undergone training regarding safety and danger prevention drills.

<Export Regulations on the Equipment>

- According to the Export Control released by Japanese Government (METI), export of the equipment may be subject to export regulation under the Foreign Exchange and Foreign Trade Act. In case of exporting the equipment or component parts of equipment from Japan, reselling, relocating or re-exporting from an original installation site out of Japan, please comply with the relevant local regulations.

<Disposal of the Equipment>

- At the end of use, the equipment shall be disposed or recycled according to relevant, local regulations. Besides the equipment itself, any hazardous residues from the process liquid must be considered and dealt with in a proper manner.

<Use of this Installation Manual>

- Read this manual thoroughly and understand the precautions regarding the safety of the equipment and its functions before handling the equipment.
- This manual is created for a person who fully understands the language it is written in. If a person, who is not able to understand the language written herein, will handle the equipment, please provide safety instructions to the personnel/operators.
- PHE supplied may differ from the drawings and pictures in these Manuals depending on the optional parts if any. Also, for the purpose of explanation, the drawings and pictures in these Manuals may omit the details, accessories, or the like.
- Changing the contents of these Manuals, in part or in whole, or using them for anything other than its intended purpose is prohibited.

<Disclaimer>

- HISAKA accepts no liability for any failures in the function or performance of the equipment caused by use of any other than genuine parts.
- HISAKA accepts no liability for any injuries or damage borne by the user, caused by use of any other than genuine parts.
- Warranty condition for products are based on document specifing vaild condition such as the sales contract before ordering and Sales agreement at the time of sales.
  Sales contracts that include standard warranty period and disclaimers can be found on our website.
  If you have any questions, please contact for our sales person in charge.

HISAKA Plate Heat Exchanger

Operation and Maintenance Manual

Table of Contents

1	Safety Precautions	P1, 2
2	Names of Components	P3
3	Components Details	P4
4	Nameplate	P5
5	Accessories	P5
6	Consumables	P5
7	Model Description	P5
8	Tests Before Commissioning Operation	P6
9	Operation	P7
10	Shutdown	P7
11	Long-term Storage/Preservation	P8
12	Maintenance	P8 to 15
13	Troubleshooting	P15, 16
14	Plate Arrangement Drawing	P18
15	Assembly Drawing	P19
16	Exploded View	P20 to 23
17	Inquiries	P24, 25

1 Safety Precautions

Read through this manual carefully before use, and use PHE properly.

If you have any questions, please inquire with our company.

- Precautions are categorized using the following symbols.

WARNING	This symbol indicates content where mishandling could result in death or severe injury.
CAUTION	This symbol indicates content where mishandling could result in injury or property damage.
NOTE	This symbol indicates important matters and/or useful information.

- Meanings of Symbols

Indicates items that are "prohibited (something that you must NOT do)".	Indicates items that are "mandatory (something that you must do)".

WARNING

Do NOT use a piping gasket to the rubber covering nozzle of PHE. Sealing performance could be decreased and it could be a cause of leaking. In case of metal covering nozzle, piping gasket is required.	**Keep fire-fighting equipment when handling flammable media.** If the flammable media ignites during operation or maintenance, it can lead to a major accident.
In general, do NOT perform pneumatic test for medium and large size PHE. For small size PHE, do not perform pneumatic test at the same pressure as hydrostatic test pressure. When compressed air or nitrogen for pneumatic test is leaked, it is very dangerous since there would be an impact caused by volume expansion in addition to such test pressure. In general, do NOT perform pneumatic test in excess of 0.75 MPaG.	**Install a protective cover on PHE when handling dangerous media, which is high temperature, high pressure, strong acid, or a strong alkaline.** If a dangerous media leaks and is splashed, it may lead to a serious accident.
Do NOT loosen the thermometer, pressure gauge, tightening bolts and nuts, and/or any other accessories during operation and/or PHE pressurized. It may cause burns or injury if fluid is blown out from PHE/pipes.	**Make sure that the operation is stopped, the internal pressure is "0", and the fluid temperature has sufficiently dropped before disassembling the PHE** If fluid splashes from the PHE during disassembly, it may cause burns or lacerations.
Do NOT use damaged tightening bolts, such as improper rust or cracks. When the tightening bolts breaks during operation or disassembly, it is dangerous not only broken pieces are scattered, but also fluid may splash from PHE.	**When removing gasket, carry out in proper location with good ventilation.** The gasket should be adhered with Hisaka's "S-1" contain an organic solvent. Breathing the volatile ingredients for a long time may cause symptoms such as headache, dizziness, and nausea. If these symptoms occur, remove person to fresh air. If signs/symptoms develop, get medical attention.
Do NOT use tightening bolts with loosed bolt head. If the swaged bolt head loosens and comes off the bolt, it could burst at high speed. It may cause a serious accident for any person or property.	**Wear protective equipment such as protective goggles, a mask, rubber gloves, and protective clothing if handling a dangerous fluid such as a strong acid or strong alkaline.** Eye Contact: Flush eyes with large amounts of water. If signs/symptoms persist, get medical attention. Skin Contact: Remove contaminated clothing and shoes. Immediately flush skin with large amounts of water. Get medical attention. Wash contaminated clothing and clean shoes before reuse. Inhalation: Remove person to fresh air. If signs/symptoms develop, get medical attention. If Swallowed: Do not induce vomiting unless instructed to do so by medical personnel. Give victim two glasses of water. Never give anything by mouth to an unconscious person. Get medical attention.
Do NOT incinerate the gasket. Incinerating gaskets releases a toxic gas and is very dangerous. Any unnecessary gaskets should be disposed as industrial waste in accordance with international, national, prefectural, and municipal regulations. Also, gaskets should be disposed under the local jurisdiction.	
Do NOT use PHE for lethal service.	
Do NOT handle the heat transfer plates in any place with strong wind. Under strong wind, the heat transfer plates it could fly, cut, injury, and bruise.	

CAUTION

Do NOT touch the side of plate pack and heat transfer plate edge.
The edge of a heat transfer plate is very sharp and may cut you.
Be sure to wear cut-resistant gloves whenever touching heat transfer plate.

Do NOT place objects on plate pack.
It may cause deformation of heat transfer plate.
Falling object may cause injury during operation.

Do NOT make heat transfer plate edge deform by contacting with surrounding object.
Deformation of the heat transfer plate may cause damage on plate gasket and result in leakage.

Do NOT shorten guide bar by cutting.
It makes disassembling of the PHE impossible.

In general, do NOT remove stud bolt of connection.
It may cause damage on the threads.
Stud bolt is to be removed very carefully not to make any damage on the threads of both stud bolt and its hole at your own risk, only when it is absolutely necessary.

Do NOT weld or attach any piping support onto the frame, guide bar, and/or guide bar support.
Welding causes thermal damage on plate gaskets and attached parts may interrupt handling when disassembling.

Do NOT enter debris or foreign materials into PHE.
Install a strainer on upstream to prevent clogging in PHE.
When flushing pipes for commissioning operation, install a temporary strainer or provide bypass on upstream PHE in order to prevent debris or foreign materials into PHE.

Do NOT start and stop the pump frequently (in a short time).
During commissioning, pay attention to time duration of pump start/stop, or there would be leakage due to difficulty of gasket restoration caused by temperature and pressure variation. After stopping, min. 3 minutes is recommended to restart.
Open and close the valve slowly so as not to create a sudden pressure fluctuation.

Do NOT operate in excess of the design conditions (fluid, temperature, flow rate, pressure, tightening length, etc.).
It may cause deformation of the heat transfer plates or leakage. Also, the required performance may not be achieved.

Do NOT apply impact pressure and instantaneous pressure fluctuation.
Do not apply impact pressure and instantaneous pressure fluctuation to PHE, such as from starting-up of pump, sudden close of valve, or by steam hammer occurred. Deformation, cracks, or leaks in the heat transfer plates are possible if long time repeated pressure pulsation within few seconds

Do NOT apply instantaneous negative pressure.
Drawdown may occur if instantaneous negative pressure is applied to the PHE by pump stop or valve closing, or heat transfer plates deformation may also.

Do not operation under the abnormal vibration (resonance).
When abnormal vibration (resonance) or abnormal sound occurs during the operation, stop operation immediately and recheck the installation or operation condition.
It may cause of breakage.

Do NOT freeze.
If freezing occurs in PHE, the heat transfer plates may be damaged. Drain out completely to avoid freezing in case of preservation in cold areas. In warm areas, if storing the equipment for a long time, store it with liquid at full capacity.

Do NOT apply any treatment to the fluid that could cause corrosion.
It may cause corrosion or damage to heat transfer plates and wetted parts.
Perform treatment suitable for the material of the heat transfer plate and wetted parts.

In case of inner strainer is inserted PHE, remove it at the time of the back wash.
It may cause damage on the inner strainer.

Please take measures such as preparing adequate insulation and grounding and so on.
Stray current during welding work can cause sparks and it may become lead to damage of the heat exchanger.

If using a pump with specifications in excess of the PHE's design pressure, install a safety device on the pump's delivery side or the PHE's inlet or outlet.
Even if not required by applicable code and regulation, a safety device is necessary to protect the equipment.

Secure working space around PHE.
Adequate piping design is required, taking into account the working space for disassembly and tightening device.

Perform maintenance of PHE that handle dangerous fluids, such as a strong acid or strong alkaline, in an environment that has drain water treatment equipment.
Waste media in accordance with laws, codes and regulations. Be careful not to drain liquid into a river or ocean area.
If untreated liquid leaks, take measures in accordance with the "Safety Data Sheet (SDS)" for the treatment liquid you used.

Remove the smell of gaskets and/or adhesive by hot water cleaning inner of PHE in order to prevent the fluid from absorbing these smells.
Fluid may absorb the smell of plate gaskets and/or adhesive when PHE is newly installed or plate gaskets are replaced.
To avoid above, clean the inner of PHE using hot water and remove the smell.

2 Names of Components

PHE consists of the following parts.

[NOTE]

- Refer to the "Plate Arrangement Drawing" for equipment specifications.

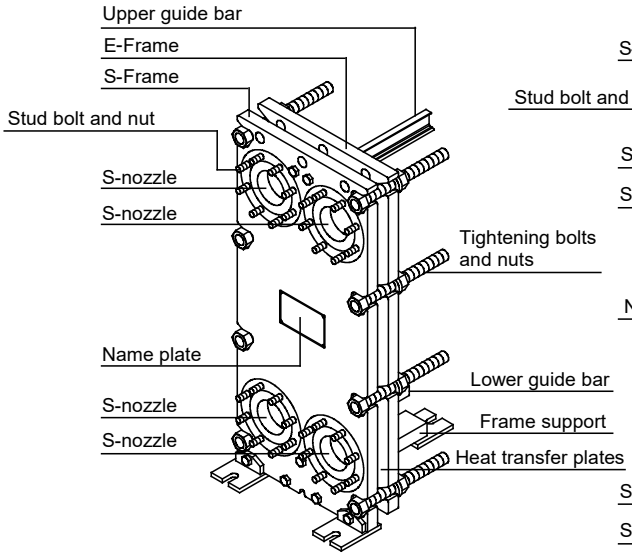

Fig. 2-1 J Type Heat Exchanger

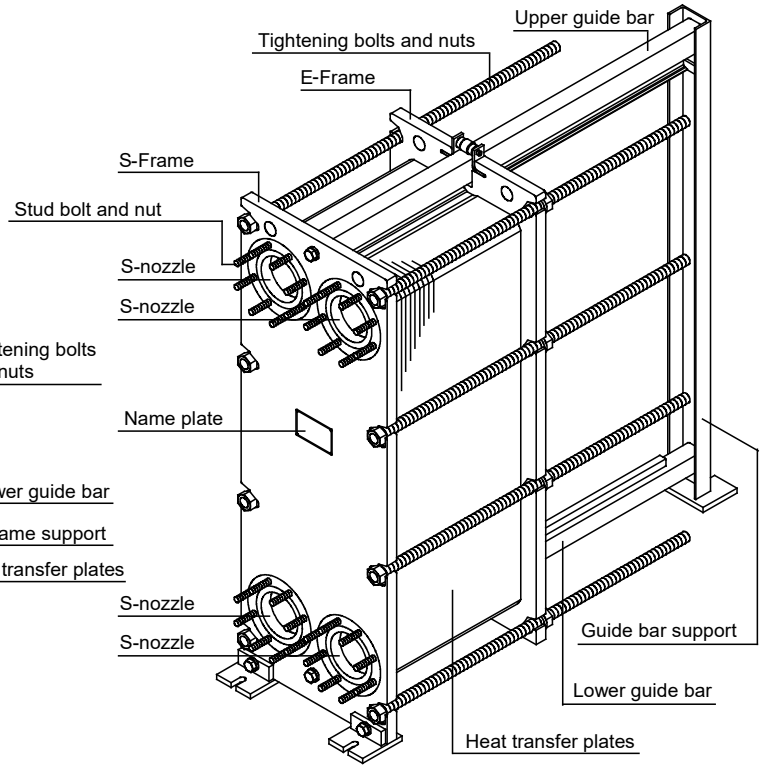

Fig. 2-2 P Type Heat Exchanger

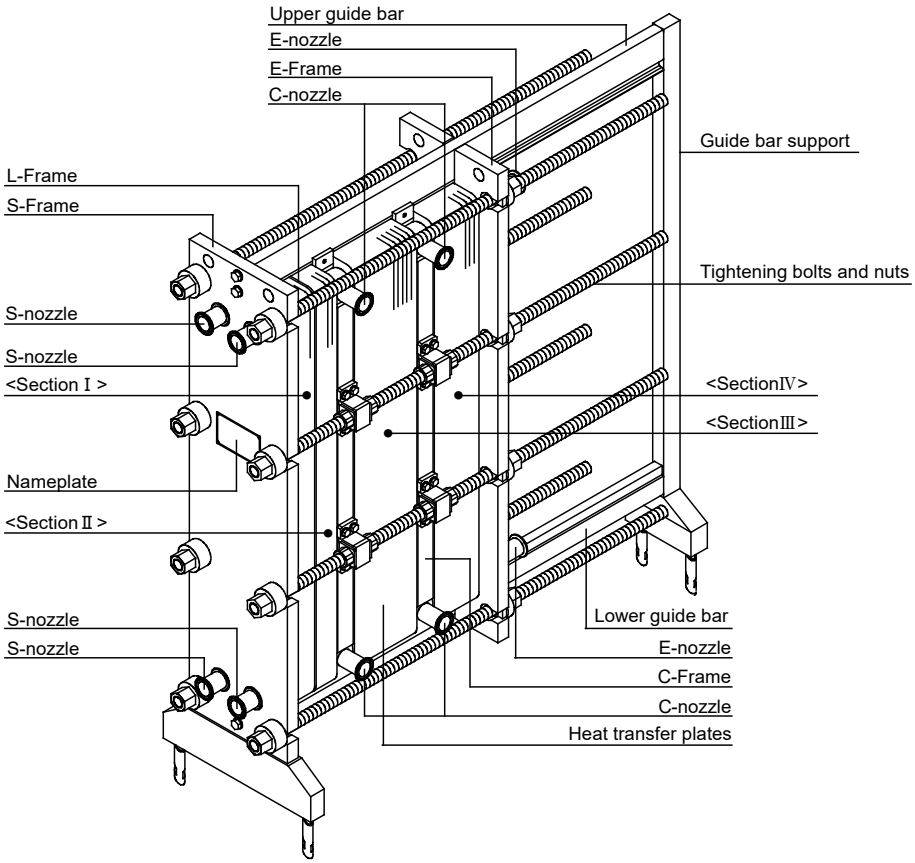

Fig. 2-3 BP2CL Type Heat Exchanger

3 Components Details

3-1 Heat Transfer Plate

The heat transfer plates comprise of the following three types.

- D-Plate (First heat transfer plate between the S, L, C, and E-Frames)
- E-Plate (Last heat transfer plate between the S, L, C, and E-Frames)
- Channel plates (Heat transfer plates except for the D-Plate and E-Plate between the S, L, C, and E-Frames)

A-Plates are fliped upside down to be used as B-Plates.The opposite is the same(Excluding some models). The A-side fluid flows on the front side of the A-plate (the side where the gasket is fixed on the A-plate), the B-side fluid flows on the front side of the B-plate (the side where the gasket is fixed on the B-plate)

We have a lineup of the following materials for heat transfer plates.

- Stainless steel, Titanium, Titanium alloy, Nickel alloy, and so on

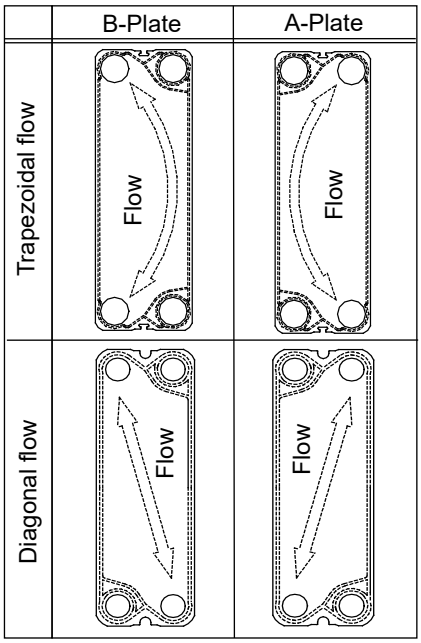

3-2 Plate Gasket

The plate gaskets comprise of the following four types.

- D-Gasket (Installed to the D-Plate port hole)
- E-Gasket (Installed to the E-Plate port hole)
- Channel gaskets (Gaskets installed to the front surfaces of heat transfer plates other than the D-Plate)
- Distance (String gasket that fills the gasket groove on the D-Plate or E-Plate)

[NOTE]

- These are not mounted on some types depending on the heat transfer plate model and whether the plate is with or without passage holes.

"A-Plate channel gaskets" are fliped upside down for Trapezoidal flow or fliped horizontal and upside down for Diagonal flow to be used as "B-Plate channel gaskets". The opposite is the same.

We have a lineup of the following materials for gaskets.

- NBR, EPDM, Silicon, FPM, PTFE encapsulated, and so on

"A-", "AG-", or "AN-" in front of the gasket material indicates "Slit-In" type.

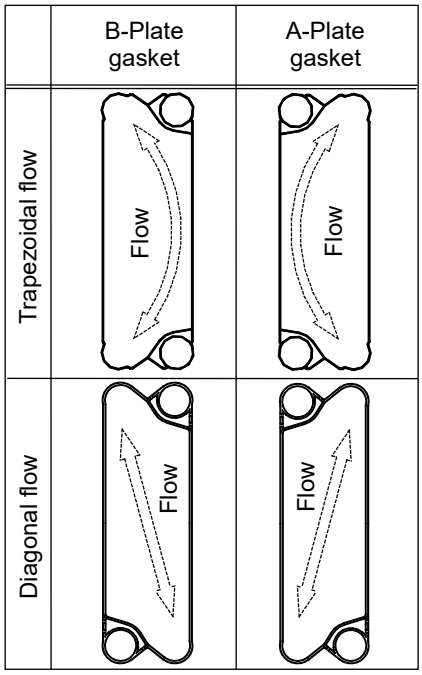

3-3 Connection

Following figures are standard products for connection.
Other types of connections are available as you want.

N	TN	KN
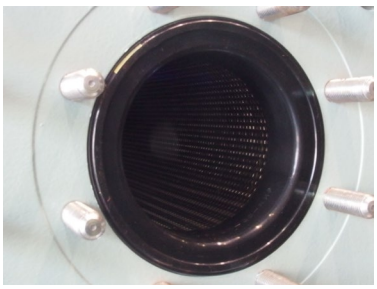	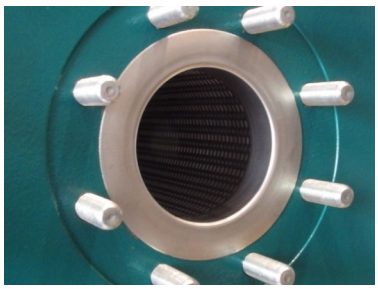	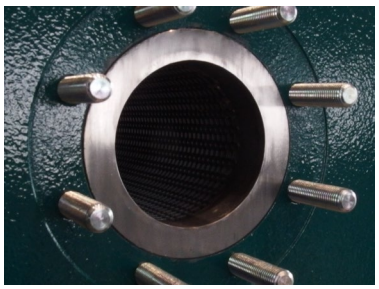
Fig. 3-1. Rubber covering type	**Fig. 3-2. Metal covering type (Bended product)**	**Fig. 3-3. Metal covering type (Welded product)**

4 Nameplate

The figure on the right is manufacturer's standard nameplate installed on a Hisaka PHE.

When inquiring, notify us of the "MFG. NO." and "MODEL (TYPE)" described on the nameplate.

TIGHTENING LENGTH Max. on the nameplate may differ from that of Assembly Drawing. The former is the actual dimension at delivery, while the later is only the design dimension. When reassembling after replacing plate gaskets or cleaning, follow the values on the nameplate.

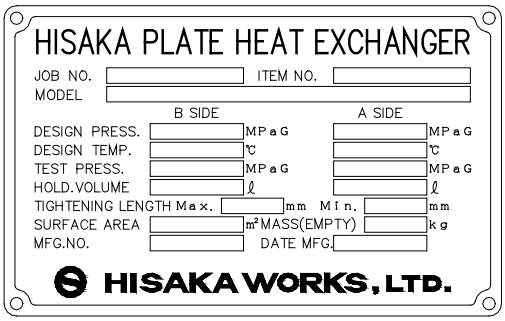

Fig. 4-1. Nameplate (sample)

5 Accessories

Any accessories, like a ratchet spanner, anchor bolt, thermometer, pressure gauge, etc., for HISAKA PHE are to be supplied as option upon request.

6 Consumables

- Not all heat transfer plates are durable parts. Heat transfer plates to be used under corrosive and/or erosive environment shall be considered as consumables. (Refer to: "12-3-1. Heat Transfer Plate Replacement")
- Plate gaskets are consumables. Replace them periodically. (Refer to: "12-3-2. Replacement of Plate Gasket")

7 Model Description

The model description for HISAKA PHE indicates the following details.

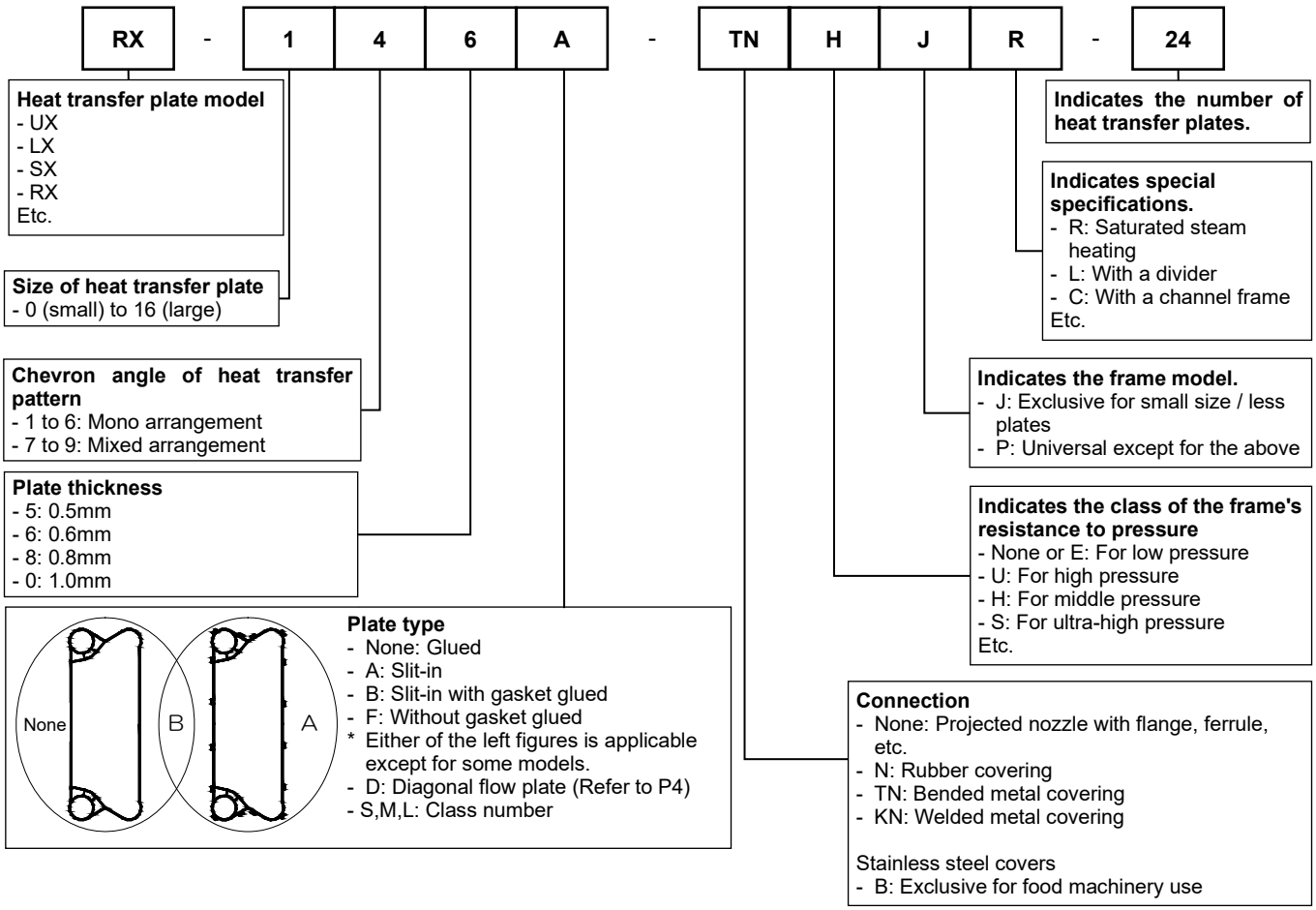

8 Tests Before Commissioning Operation

After installation, commissioning operation of the PHE is to follow the conditions below.

8-1 System Test, Piping Test, Equipment Test

Check the following nine items.

If all of the items are not satisfied, do not operate the equipment and inform your supervisor or safety manager.

- ☐ Install safety apparatus compliant with various standards or regulations to the PHE installed line.
- ☐ Confirm that the nozzle orientation in the "Plate Arrangement Drawing" and "Assembly Drawing".
- ☐ Provide venting on both side of the PHE to facilitate the removal of air from the system.
- ☐ Do not apply valve and piping loads to the nozzles. Use pipe supports not to load on the S-, C-, and E-Frames. However, support structures are not installed in the maintenance space, or a removable support structure is used.
- ☐ Ensure that flushing is completed in order to prevent welding spatter, debris and/or foreign materials into PHE.
- ☐ Confirm that the tightening length is correct. Tightening length on the Assembly Drawing may differ from actual length. Refer the tightening length in the nameplate which describes the actual dimension at the delivery and after maintenance.
- ☐ Confirm that all nuts for tightening bolt are not loose. Confirm that all nuts for S-,E-nozzle are not loose.
- ☐ Fulfill the fluid for both hot and cold side. Confirm all air is out and liquid will flow out of the vent. Ensure that start the operation with fulfilled condition, when non-fulfilled condition of PHE, it may result the following;
  - pump overload
  - heat transfer plates may be deformed and cracked, leaked due to impact pressure
- ☐ There is no leak between the heat transfer plates, piping connections, or other locations.

8-2 Pressure/Leak Test for PHE and System Pressure Test

PHE has been performed pressure-leak test before delivery. In case of retest at site, follow below instructions.

Also, in case of pressure /leak test for whole system including up/down stream equipment, follow below instructions.

- **In case of hydrostatic test**

  Pressurize hot and cold side independently and/or both sides at the same time. Actual test pressure shall not exceed the specified test pressure. Over test pressure could result in heat transfer plate/frame deformation and/or leaking. The test pressure is referred to Plate Arrangement Drawing.

- **In case of pneumatic test**

  Pressurize hot and cold side independently and/or both sides at the same time. Keep distance from PHE during the test. When compressed air or nitrogen for pneumatic test is leaked, it is very dangerous since there would be an impact caused by volume expansion in addition to such test pressure. The test pressure is referred to Plate Arrangement Drawing.

8-3 Initial Flushing for Piping

Initial flushing for piping shall be performed after piping before operation in order to prevent welding slag and/or leavings, such as tool or dust cloth, come into PHE chamber. Generally, the methods of flushing are;

- Removing PHE from the piping
- Applying the temporary strainer for the upstream piping

In case of removing PHE from the piping, do not remove studded bolt on PHE frame. In case of applying temporary straighter, refer to “1 Installation Manual, Table 8-1 Recommended strainer hole size” and select the adequate strainer hole size. Apply the strainer with external reinforcement such as punching metal because screen without reinforcement can be damaged easily.

9 Operation

The procedure for start-up depends on your use. Reconfirm your use and follow its procedure.

- General Starting Operation (No burnt or No frozen fluid)

- Fullfill PHE chamber with media after all air is expelled for both sides.	⇨ - Flow heating side media.	⇨ - Flow heated side media.

- Starting operation in case of possibility of burn by using hot water

- Fullfill PHE chamber with media after all air is expelled for both sides.	⇨ - Flow heated side media.	⇨ - Flow heating side media.

- Starting operation in case of possibility of burn by using saturation vapor.

- Fullfill PHE chamber with media after all air is expelled for heated sides. - Drain media from heating side.	⇨ - Flow heated side media.	⇨ - Flow heating side media.

- Starting operation in case of freezing by using chilled water

- Fullfill PHE chamber with media after all air is expelled for both sides.	⇨ - Flow cooled side media.	⇨ - Flow cooling side media.

[CAUTION]: Do NOT apply impact pressure and operation under the abnormal vibration (resonance).

- Do not apply impact pressure to PHE, such as from starting-up of pump, sudden close of valve, or by steam hammer occurred. Deformation, cracks, or leaks in the heat transfer plates are possible if long time repeated pressure pulsation within few seconds.
- When abnormal vibration (resonance) or abnormal sound occurs during the operation, stop operation immediately and recheck the installation or operation condition. It may cause of breakage.

10 Shutdown

The procedure for shutdown depends on your use. Reconfirm your use and follow its procedure.

- General shutting down (No burnt or No frozen fluid)

- Shut off heated side media.	⇨ - Shut off heating side media.	⇨ - Hold until next start-up.

- Shutting down in case of possibility of burn by using hot water

- Shut off heating side media.	⇨ - Shut off heated side media after being less than burning temperature of the media.	⇨ - Hold until next start-up.

- Shutting down in case of possibility of burn by using saturation vapor.

- Shut off heating side media.	⇨ - Shut off heated side media.	⇨ - Discharge drain steam completely after shutting down.

[CAUTION]: Check the NO steam leaking.

- Surely check that NO steam is leaking after shutdown of PHE.
  Steam might leaks slightly, even if steam valve may seem to be firmly closed.

- Shutting down in case of freezing by using chilled water

- Shut off cooling side media.	⇨ - Shut off cooled side media.	⇨ - Control the system to prevent freezing at shutting down. - Drain at least one medium if there is a risk of freezing after shutting down.

[CAUTION]: Do NOT operate vacuum pressure to PHE.

- Provide safety device such as vacuum breaker to prevent deformation/cracking/leaking of heat transfer plate. Media could contract the volume due to temperature decrease of media as a result PHE chamber could work into vacuum pressure after shutting down of high temperature operation.

[CAUTION]: Do not seal the fluid side to be heated.

- Even if the flow of the heating fluid is stopped, the heated fluid side continues to be heated by the remaining heating fluid, which may cause volumetric expansion due to the rise in fluid temperature. Since such volumetric expansion may lead to the deformation of the heat transfer plate, a safety device such as a relief valve must be installed in the piping on the heated fluid side.

11 Long-term Storage/Preservation

If the unit has been used and long-term storage is required, PHE is to be placed in storage as below table. The storage conditions are depending on your application and the environment.

Environment/Application	Storage Procedure
General use	It must be completely drained and storage with empty condition to avoid failures such as alteration of any remaining liquid, corrosion in heat transfer plates, and damage to components from freezing.
Seawater use	It must be completely fulfilled and storage. It is recommended to replace the seawater with clean water to prevent decay. In case of long term storage with empty and dry condition, dried scale on the heat transfer plates might not be able to cleaned.
Cold area use	It must be completely drained and storage with empty condition If freezing occurs in PHE, the heat transfer plates may be damaged.
Low temperature media use	

Take care following four items when storing a spare gasket long term.

- Do not place any items on it to avoid gasket deformation.
- Store it in a black plastic bag or cardboard box to avoid ultraviolet exposure.
- Store in a cool place avoiding direct sunlight and high temperature, high humidity.
- Storage lifetime of new plate gasket is 3 years after the purchase. .

Take care following six items when storing a spare adhesive and double-sided tape long term.

- Store in a cool place avoiding direct sunlight and high temperature, high humidity, flammable condition.
- In case of food application “F-3”, keep refrigerated once opened (5 – 10℃).
- Storage lifetime of new adhesive is 2 years after the purchase in case of general application “S-1” and double-sided tape.
- In case of food application “F-3” or silicon adhesive, use before expire date.
- In case of food application “F-3”, use within 1 month or before expire date which is earlier once opened.
- Mix it well before use because the solvent and solids may separate due to long-term storage.

12 Maintenance

Periodic maintenance is recommended for long life use of PHE.

[NOTE]

- The maintenance cycle is depending on your usage conditions. It is recommended to perform maintenance once per year for brand-new PHE and estimate appropriate maintenance cycle based on the result thereof.

Do not hesitate to contact us for PHE total support, the "MARUGOTO PACK" maintenance.

Our excellent staffs, well-trained, carry out maintenance with their professional skills and techniques.

If the customer carries out maintenance by yourself, the below explanations: "12-1. Disassembly", "12-2. Cleaning", "12-3. Maintenance", "12-4. Inspection", "12-5. Assembly", and "12-6. Leakage Detection" to be followed.

12-1 Disassembly

Disassembly preparation

(1) Record the tightening dimensions before disassembly in case of reusing plate gaskets. Record of the tightening length is not required when using brand-new plate gaskets.

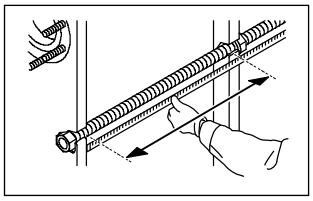

(2) Drain out media completely and make sure that no media and pressure is remaining from the both chambers.

(3) For PHE with E-Nozzle and/or C-Nozzle, remove the primary and secondary connection and ensure to keep maintenance space and moving space for E-Frame, C-Frame, and heat transfer plates.

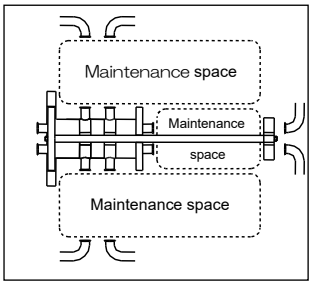

(4) Apply lubricant the tightening bolts after cleaning all tightening bolt threads.

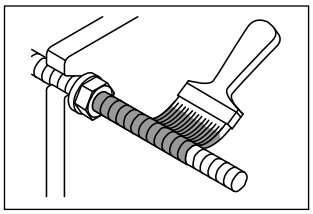

(5) Prepare the ratchet spanner or the automatic tightening device.

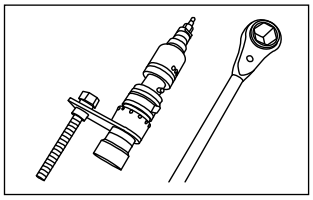

Disassembly work

Remove the tightening bolts and nuts as following steps by using a ratchet spanner or automatic tightening device.
The following procedures shows an example of PHE with 14 tightening bolts and nuts.

(6) Slowly loosen the tightening bolts in order from 1-2 to 13-14.

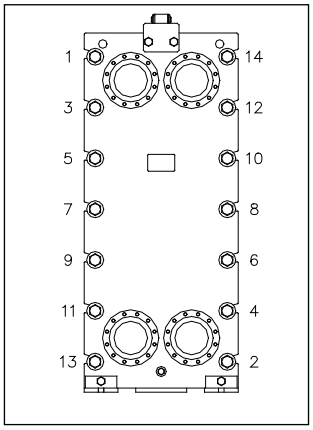

[NOTE]

- If you have two sets of ratchet spanners and/or automatic tightening device, slowly loosen two tightening bolts that are located diagonal, in order, 1 and 2, 3 and 4, to 11 and 12, 13 and 14, simultaneously.

[CAUTION]

- Take care not to fall down the tightening bolts during disassembly and assembly the PHE, as it may cause injury.

(7) After loosing tightening bolts/nuts, where the tightening bolt/nut can easily loose by using bolts only 3,4,11 and 12, then remove all tightening bolts and nuts except for 3, 4, 11 and 12.

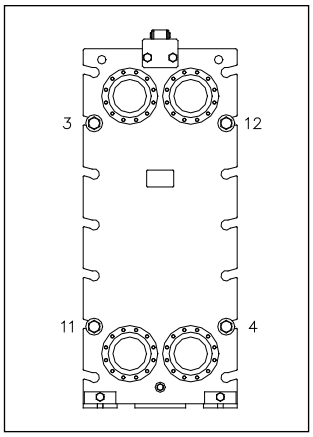

[NOTE]

- Generally leave four tightening bolts and nuts, below the upper nozzles and above the lower nozzles.
  (These four tightening bolts generally are longer than the other tightening bolts.)

(8) Slowly loosen the tightening bolts in order from 3 - 4 - 11 - 12 - 3 and so on.

[NOTE]

- If you have two sets of ratchet spanners and/or automatic tightening device, slowly loosen two tightening bolts that are located diagonal, in order, 3 and 4, 11 and 12, simultaneously.

(9) After loosening the 3, 4, 11, 12 tightening bolts, remove them.

(10) Move the E-Frame to the guide bar support.

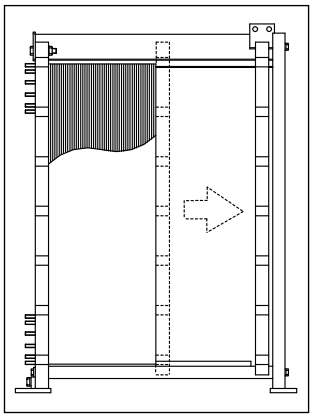

[NOTE]

- If the E-Plate and E-Frame are sticking each other, move back the E-Frame slightly to separate E-Plate and E-Frame, and then move E-Frame to the back end.

12-2 Cleaning

12-2-1 Manual Cleaning

Cleaning preparation

- Prepare a high-pressure washer or a soft brush, cleaning water, and dust cloths before cleaning the heat transfer plates. Prepare a work/step platform for large PHE because heat transfer plate can clean with suspending on the upper guide bar.
- Cover PHE with protective sheet to prevent the scattering of cleaning water.
- Install a dust filter on the drain port to prevent clogging of the port by scale or dirt from heat transfer plates.

Cleaning method

Two method of cleaning the heat transfer plates are available.

Select a cleaning method depending on the PHE's installation condition and the capacity of effluent disposal.

- **Cleaning by heat transfer plates Removed**
  Remove the heat transfer plates from the PHE frame to clean. Place or pile the heat transfer plates and clean both the front and back surfaces using a high pressure washer or a soft brush, such as nylon.

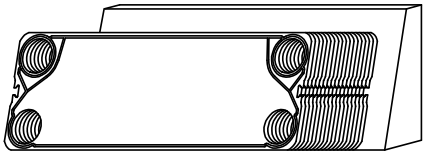

Fig. 12-1 Removal cleaning

- **Cleaning by heat transfer plates Suspended**
  Clean the heat transfer plates while they are still suspended from the upper guide bar. Move the heat transfer plates one at a time to the S-Frame or E-Frame direction and clean both the front and back surfaces of the heat transfer plates using a high pressure washer or a soft brush, such as nylon.

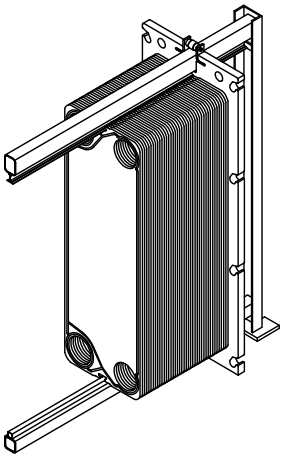

Fig. 12-2 Suspended cleaning

⚠	**[CAUTION] Do NOT use the heat transfer plates with a steel brush or steel wool.** ● If heat transfer plates are damaged by using a steel brush or steel wool, sealing performance could be decreased and it could cause corrosion. Therefore, use a soft brush, such as nylon, so as not to damage the heat transfer plates.
⚠	**[CAUTION] Do NOT have the nozzle of the high pressure washer close to the PHE components.** ● High pressure water may peel the frame's coating or damage the heat transfer plate and plate gasket surfaces. Therefore, keep the nozzle of the high pressure washer at least 100 mm away from the object being cleaned.
⚠	**[CAUTION] Precaution for using a high pressure washer** ● Discharge pressure is 1 to 15 MPaG for the cleaning. Use water and a soft brush, such as nylon, for the scale which is difficult to remove.

12-2-2 CIP - Cleaning In Place

Cleaning in place is the preferred cleaning method when especially cleaning liquid are processed in PHE unit. Appropriate cleaning liquid could achieve a sufficient cleaning effect.

- Please refer to "Plate Cleaning Manual" to select cleaning liquids and agents for PHE.

12-3 Maintenance

12-3-1 Heat Transfer Plate Replacement

(1) Removing heat transfer plates

Replace any heat transfer plate with deformation, corrosion, or erosion to a brand-new one.

Please refer to “Plate Arrangement Drawing” and “Gasketting Manual” for heat transfer plate arrangement.

- **Rail type of upper guide bar (not round type)**

- Slightly bend the bottom of the heat transfer plate.
- Slightly turn the heat transfer plate to the removing direction.
- Remove the lower hanger from the lower guide bar.
- Lift the heat transfer plate.
- Turn the heat transfer plate to the removing direction with a pivot point of upper hanger.
- Remove the heat transfer plate from the upper guide bar rail.

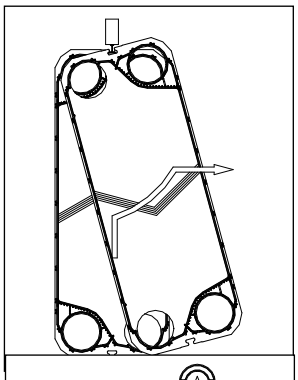

- **Round type of upper guide bar (not rail type)**

- Lift the heat transfer plate.
- Remove the hanger from the heat transfer plate.
- Turn the heat transfer plate to removing direction with a pivot point of upper guide bar and remove.

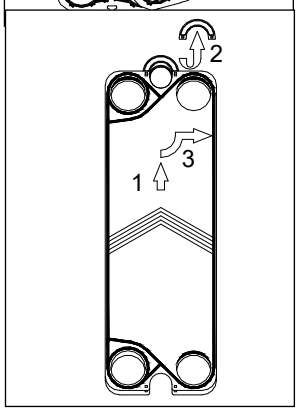

[NOTE]

- Following PHE models use round type guide bar and don’t have hangers. Those models are held by upper and lower guide bars; UX-005, UX-01, RX-00, and CX(W)-01,CX-10.

(2) Hanging heat transfer plates

- **Rail type of upper guide bar (not round type)**

- Hang the heat transfer plate's upper hanger on the upper guide bar rail.
- Turn the heat transfer plate to the inside direction with a pivot point of upper hanger and install the lower hanger to the lower guide bar.

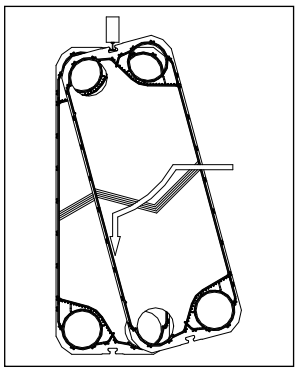

- **Round type of upper guide bar (not rail type)**

- Install the upper hanger of the heat transfer plate on the upper guide bar.
- Turn the heat transfer plate to the inside direction with a pivot point of upper hanger and install the lower hanger to the lower guide bar.
- Lift the heat transfer plate and hook the hanger.
- Hang the heat transfer plate on the upper guide bar.

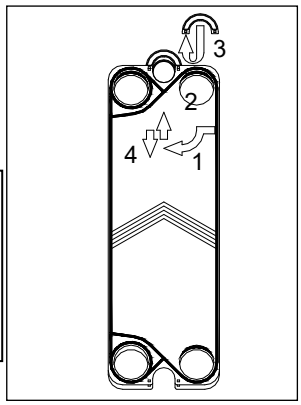

[NOTE]

- Following PHE models use round type guide bar and don’t have hangers. Those models are held by upper and lower guide bars; UX-005, UX-01, RX-00, and CX(W)-01,CX-10.

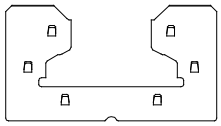

This type of hanger is set on front (gasketted) side. When YX model, set on back side.

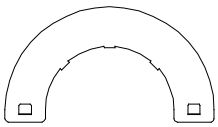

This type of hanger is set on back (non-gasketted) side. When EX model, set on front side.

12-3-2 Replacement of Plate Gasket

Replace a plate gasket if it has any wearing, cracks, swelling, carbonization, adhesion, or foaming.

For types of plate gaskets, refer to each model's "Gasketting Manual".

(1) Removing the plate gasket

1) Remove the used gasket.

- Remove the used gasket with moderate force not to deform the heat transfer plate.
  At this time, do not use sharp tools to remove the gasket to avoid damaging the heat transfer plate.

2) Clean the plate gasket groove of heat transfer plate.

- Use solvent on the market to wipe away any adhesive remaining in the heat transfer plate's gasket groove.
- Remove dirt, dust, which is stuck on the heat transfer plate's gasket groove.

(2) Preparing to replace the plate gasket

1) If replacing plate gaskets, check and prepare the number of required gasket.
   Visually check that there is no dirt, dust, which is stuck on the plate gasket's front and back surfaces. If there is any visible scale on the front or back surface of the plate gasket, wipe it off using a clean dust cloth.

2) Prepare appropriate adhesive for the plate gasket material.
   There are the following four types of adhesive. Use the adhesive HISAKA specified.

Types of adhesive	Purpose of use
S-1	General use
F-3	For food products
Silicon type	For silicon gaskets
Double-sided tape	PTFE encapsulated gaskets, food products, etc.

(3) Gasket adhesion.....Glued gaskets

1) Applying adhesive

- Uniformly apply the specified adhesive to heat transfer plate's gasket groove.
  Adhesion work should be done at a well-ventilated location because "S-1" adhesive contain organic solvents. Work in improperly vented room is prohibited.
- Adjust the quantity of adhesive applied not to overflow the adhesive from the heat transfer surface when the plate gasket is set on heat transfer plate.

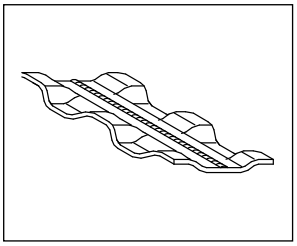

2) Gasketting on heat transfer plate

- Set plate gasket on heat transfer plate gasket groove.
  At this time, be careful to prevent the gasket from run on to gasket groove wall.
- The gasket expands during hot season and shrinks during cold season. When gasketting, put the gasket in tight and or extend it.

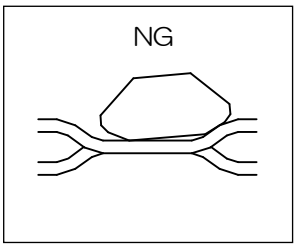

3) Curing and pressing (Refer to P5 only if the plate gasket is type "B" or "None".)

- Pile up gasketted heat transfer plate, place a weight (approx. 5kg) and a board for curing. Perform curing time is 15 minutes and over.
- Be careful not to fall over piled plates.
  As recommendation, piled height is up to max. 1,000 mm.

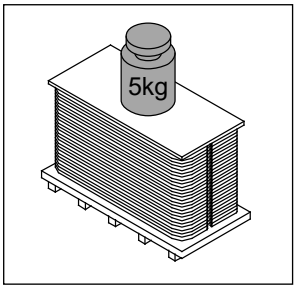

(4) Gasketting.....Gaskets other than glued type

1) Gasketting

- In the case of “Slit-in” type gaskets
  Attach the plugging part of the gasket into the slit on the outside of plate gasket groove.
- In the case of “Hook lock” type gaskets
  Hook the plug part of the gasket onto the outside of the plate.
- Be careful not to run on to gasket groove wall.
- Please refer to “5. “Slit-In”& “Hook-Lock” Type Gasketting Manual” for detailed instructions on how to gasketting.

2) Gasket Bonding

- Gaskets without plugs need to be installed on the front side of the D plate and the back side of the E plate using adhesive. Apply adhesive to the gasket groove and set the D gasket or E gasket in place.
  Note: For only models which require gaskets of E-plate back side

[CAUTION]

- Plate gasket has two sides. It is correct when stamp and color marking can be seen. (Some models are exception.) Before gasketting, fix any twisting of gasket and check the front and back surfaces.

12-4 Inspection

Be sure to perform the following inspections before assembling a Hisaka PHE.

- **Checking of heat transfer plate arrangement**
  - While moving all the heat transfer plates toward the S-Frame side or E-Frame side one by one, check the heat transfer plate arrangement.
  - For heat transfer plate arrangement, refer to the "Plate Arrangement Drawing” and each model's "Gasketting Manual".
    Furthermore, look at the arranged heat transfer plates from the side of PHE. If the arrangement is incorrect, heat transfer plates with the same configuration will be lined up.

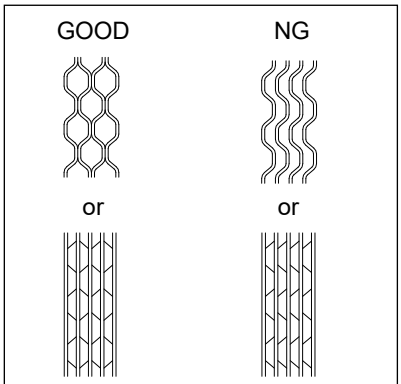

Heat transfer plate patterns

- **Inspection of defects on the heat transfer plate two sides and plate gasket surface**
  - While moving the heat transfer plates toward the S-Frame side or E-Frame side one by one, visually check for foreign material on the two sides of the heat transfer plate gasket groove and the plate gasket surface, and for defects such as damage and/or corrosion.
    If there is any foreign material on the two sides of the heat transfer plate gasket groove and/or the plate gasket surface, remove it using a soft cloth such as a dust cloth.
    If there is any visible damage, corrosion on the two sides of heat transfer plate or the plate gasket surface, replace it with a brand-new one.
  - At the same time, check that the plate gasket is free from peeling off the heat transfer plate.
    If the gasket is peeling from plate groove, re-bonding only the peeling part.
  - In case of “slit-in” type (plate gasket type "A"), only D-Plate front side and E-Plate back side are to be adhered. Use Hisaka specified adhesive.

- **Damage inspection for the tightening bolts and nuts**
  - Visually inspect the surface of tightening bolts and nuts, and if there is any damage that may interfere with tightening, such as scratches, dents, or rust, replace it with a brand-new one.

12-5 Assembly

Assembly preparation

(1) Prepare the ratchet spanner or the automatic tightening device.

(2) Grease up the tightening bolts after cleaning all tightening bolt threads.

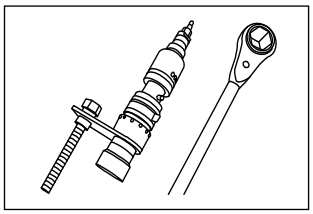

Assembly work

(1) Move all heat transfer plates that have been checked/inspected plate arrangement to the S-Frame side, and move the E-Frame to the S-Frame side.

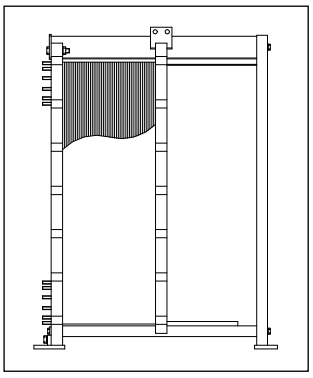

(2) Place the tightening bolts for position 3, 4, 11, and 12.

[NOTE]

- Place the tightening bolts and nuts in four positions, below the upper nozzles and above the lower nozzles. (If there are long bolts and short bolts, place the long bolts first.)

[CAUTION]

- Take care not to fall down the tightening bolts during disassembly and assembly the PHE, as it may cause injury.

(3) Tighten the bolts to ensure the dimension in position 3, 4, 11 and 12 should be equal.

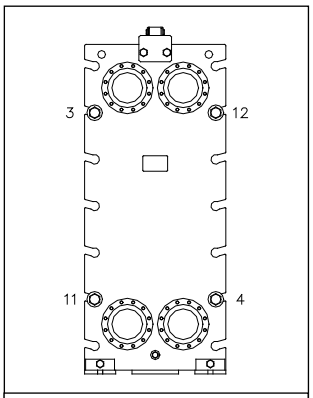

(4) Slowly tighten the bolts in order of 3→4→11→12→3→ and so on.

[NOTE]

- If you have two sets of ratchet spanners and/or automatic tightening device, slowly tighten two tightening bolts that are located diagonal, in order, 3 and 4, 11 and 12, simultaneously.

(5) Where 3, 4, 11, and 12 become hard to tight, place all tightening bolts and nuts in position 1 to 14.

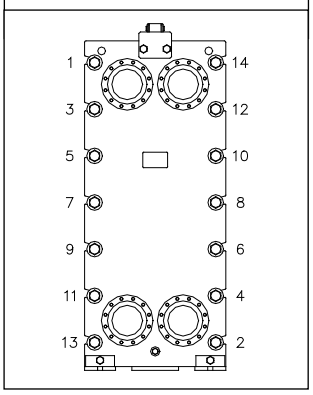

(6) Tightening length of 1 to 14 should be equal.

(7) Slowly tighten the tightening bolts in order of 1, 2, to 13, 14, to 1.

[NOTE]

- If you have two sets of ratchet spanners and/or automatic tightening device, slowly tighten two tightening bolts that are located diagonal, in order, 1 and 2 -> 13 and 14 -> 3 and 4 -> 11 and 12 -> … -> 5 and 6 -> 7 and 8, simultaneously. The difference between each tightening length shall be within 10mm. Further, the difference shall decrease to 5mm, 3mm and 1mm from 10mm when it gets harder to tighten up in order to prevent galling of the tightening bolts and nuts.

(8) Repeat step (7) until the tightening below-specified lengths.

- In case that plate gaskets are not to be replaced: Tightening lengths recorded before disassembly
- In case that plate gaskets are to be replaced: Tightening Length Max. on the nameplate

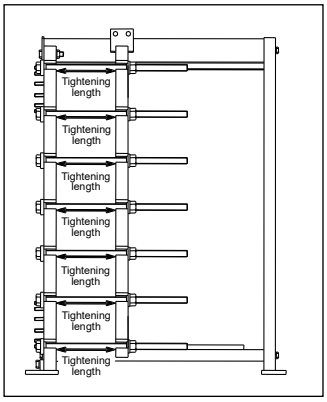

[NOTE]

- Tightening for the HISAKA PHE shall be managed by tightening lengths but not by torque counting by millimeters. It is not a problem if there might be some different tightening torque between each tightening bolt position.

12-6 Leakage Detection

(1) Leakage detection shall be performed once assembly of PHE has been completed.
Check if any leakages appear at top, bottom and both sides of plate pack by carrying out hydrostatic test.
Testing pressure shall not exceed the design pressure.

(2) Maintain pressure for 10 minutes or longer. All works can be completed if no leakage.
In case of any leakage detected, mark on the leaking part and disassemble PHE again for visual check on the heat transfer plate and gasket surface.

13 Troubleshooting

Symptom	Possible cause(s)	Remedy/ Solution
Heat transfer performance has decreased.	The heat transfer surfaces get fouled.	Disassemble the Heat Exchanger and make the heat transfer plates clean. Be sure to check if any pipes connected to the inlet and outlet of PHE are clean.
The differential pressure increases or the flow rate decreases.	Fouling on the heat transfer surface is making the plate gap narrow.	
	The port holes and/or the heat transfer surfaces are clogging.	
Fluid is leaking to the outside from between heat transfer plates.	Sealing performance has decreased due to insufficient tightening.	After PHE internal pressure shall be atmospheric pressure and tighten the plate pack sufficiently. However, do not tight shorter than the minimum length.
	Sealing performance has decreased due to plate gasket deterioration.	Disassemble PHE and replace any damaged plate gaskets to brand-new one.
	Foreign material exists on the sealing surface of plate gasket.	Disassemble PHE and wipe off the foreign materials on the sealing surface of plate gasket by using a dust cloth.
	Gasket runs on to gasket groove wall.	Disassemble PHE and reset the plate gasket.
	The heat transfer plate arrangement is incorrect.	Disassemble PHE and heat transfer plate arrangement shall be corrected.
	Heat transfer plate has crack and/or pin-hole due to corrosion etc.	Disassemble PHE and replace any damaged heat transfer plate to brand-new one.
	Heat transfer plate deforms.	
Fluid is leaking to the outside from between S-Frame and the D-Plate.	Sealing performance has decreased due to insufficient tightening.	After PHE internal pressure shall be atmospheric pressure and tighten the plate pack sufficiently. However, do not tight shorter than the minimum length.
	Sealing performance has decreased due to D-plate gasket deterioration.	Disassemble PHE and replace any damaged D-plate gaskets to brand-new one.
	Foreign material exists on the sealing surface of D-plate gasket.	Disassemble PHE and wipe off the foreign materials on the sealing surface of D-plate gasket by using a dust cloth.
	D-plate gasket runs on to gasket groove wall.	Disassemble PHE and reset the D-plate gasket.
	Heat transfer plate has crack and/or pin-hole due to corrosion etc.	Disassemble PHE and replace damaged D-plate to brand-new one.

Symptom	Possible cause(s)	Remedy/ Solution
(Continued from the previous page) Fluid is leaking to the outside from between S-Frame and the D-Plate.	Metal covering nozzle has crack and/or pin-hole due to corrosion etc.	Replace a set of the S-Frames with a brand-new one. Inquire with our company whether the welding part can be repaired/changed or not.
	Welding part of metal covering nozzle has crack and/or pin-hole.	
	Rubber covering nozzle has crack.	
Fluid is leaking to the outside from between E-Frame and the E-Plate.	Sealing performance has decreased due to insufficient tightening.	After PHE internal pressure shall be atmospheric pressure and tighten the plate pack sufficiently. However, do not tight shorter than the minimum length.
	Sealing performance has decreased due to E-plate gasket deterioration. (If equipment has E-Nozzle)	Disassemble PHE and replace any damaged E-plate gaskets to brand-new one.
	Foreign material exists on the sealing surface of E-plate gasket. (If equipment has E-Nozzle)	Disassemble PHE and wipe off the foreign materials on the sealing surface of E-plate gasket by using a dust cloth.
	E-plate gasket runs on to gasket groove wall. (If equipment has E-Nozzle)	Disassemble PHE and reset the E-plate gasket.
	Heat transfer plate has crack and/or pin-hole due to corrosion etc.	Disassemble PHE and replace damaged E-plate to brand-new one.
	Metal covering nozzle has crack and/or pin-hole due to corrosion etc. (If equipment has E-Nozzle)	Replace a set of the E-Frames with a brand-new one. Inquire with our company whether the welding part can be repaired/changed or not.
	Welding part of metal covering nozzle has crack and/or pin-hole. (If equipment has E-Nozzle)	
	Rubber covering nozzle has crack. (If equipment has E-Nozzle)	
The mixture of hot side media and cold side media has occurred.	Heat transfer plate has crack and/or pin-hole due to corrosion etc.	Disassemble PHE and replace any damaged heat transfer plate to brand-new one.

MEMO

14 Plate Arrangement Drawing

<Sample>

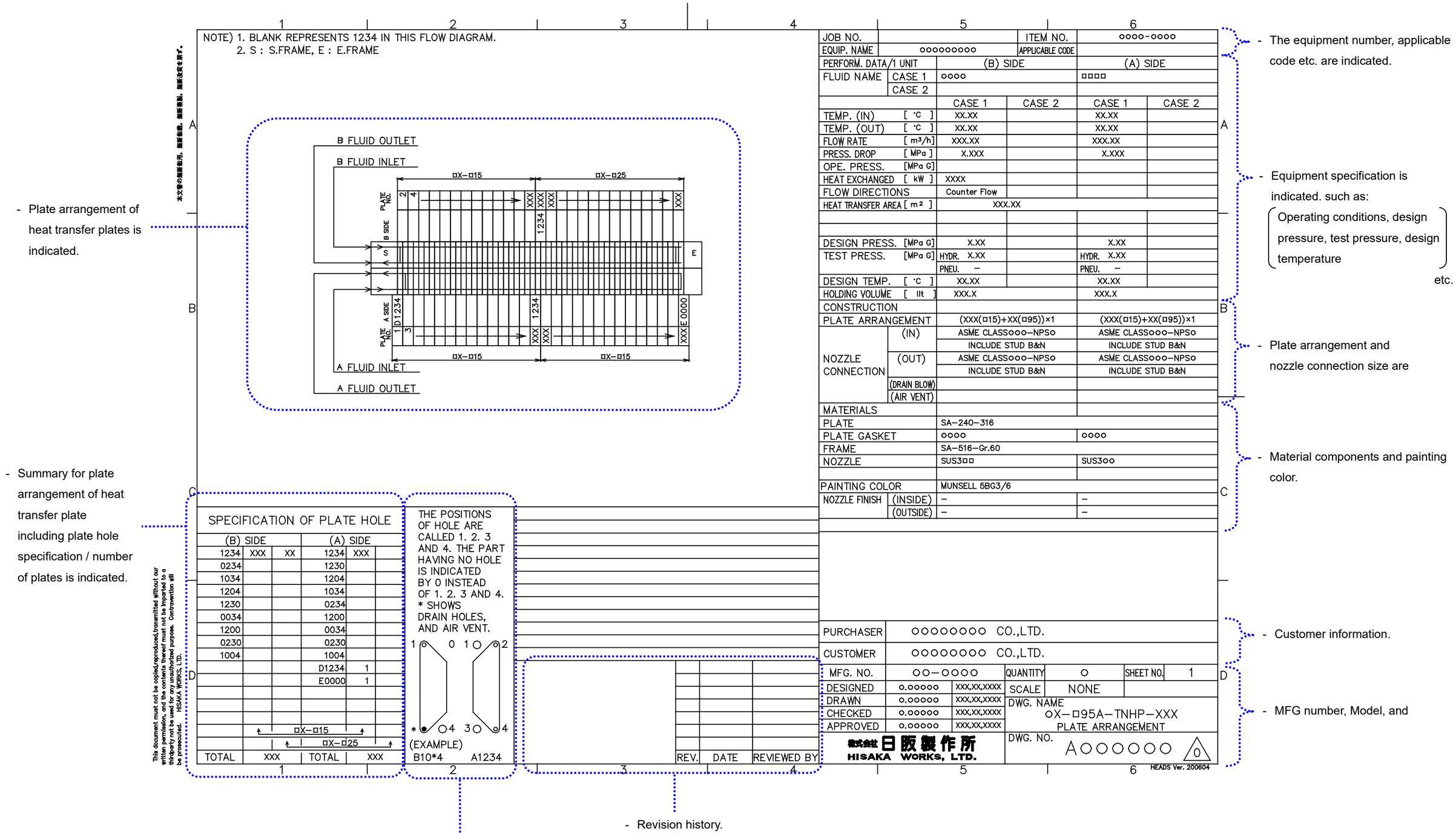

- Plate arrangement of heat transfer plates is indicated.
- Summary for plate arrangement of heat transfer plate including plate hole specification / number of plates is indicated.
- The equipment number, applicable code etc. are indicated.
- Equipment specification is indicated. such as: (Operating conditions, design pressure, test pressure, design temperature) etc.
- Plate arrangement and nozzle connection size are
- Material components and painting color.
- Customer information.
- MFG number, Model, and
- Revision history.
- The hole symbols and names for heat transfer plates are indicated.

15 Assembly Drawing

This is one example of the Assembly Drawing of a Hisaka Plate Heat Exchanger. The following information is described in the Assembly Drawing.

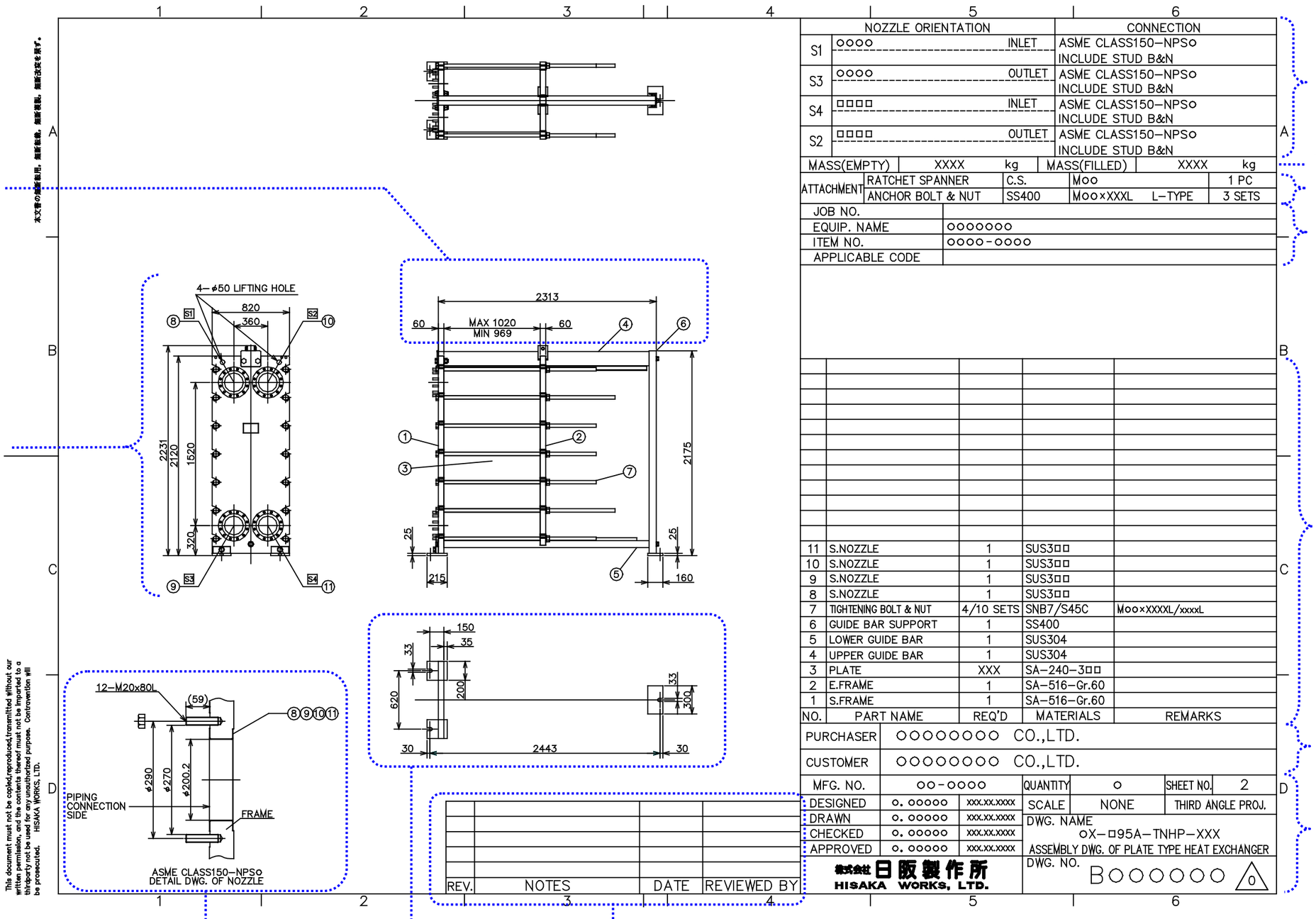

- Tightening length for the heat transfer plates and full length of the PHE are illustrated.
- The PHE's external dimensions and connect position of piping are illustrated.
- Describes the position, standard, and diameter for piping to be mounted.
- Describes this equipment's weight.
- Describes accessories.
- Describes the equipment number, applicable regulations, and the like.
- Describes the names, materials, required quantity, and specifications of components in simple terms.
- Describes customer information.
- Describes the serial number, model, and number of equipment units.
- This is the a drawing of the equipment's foundation dimensions.
- Some also include a detailed drawing of the nozzle.
- Describes this drawing's revision history.

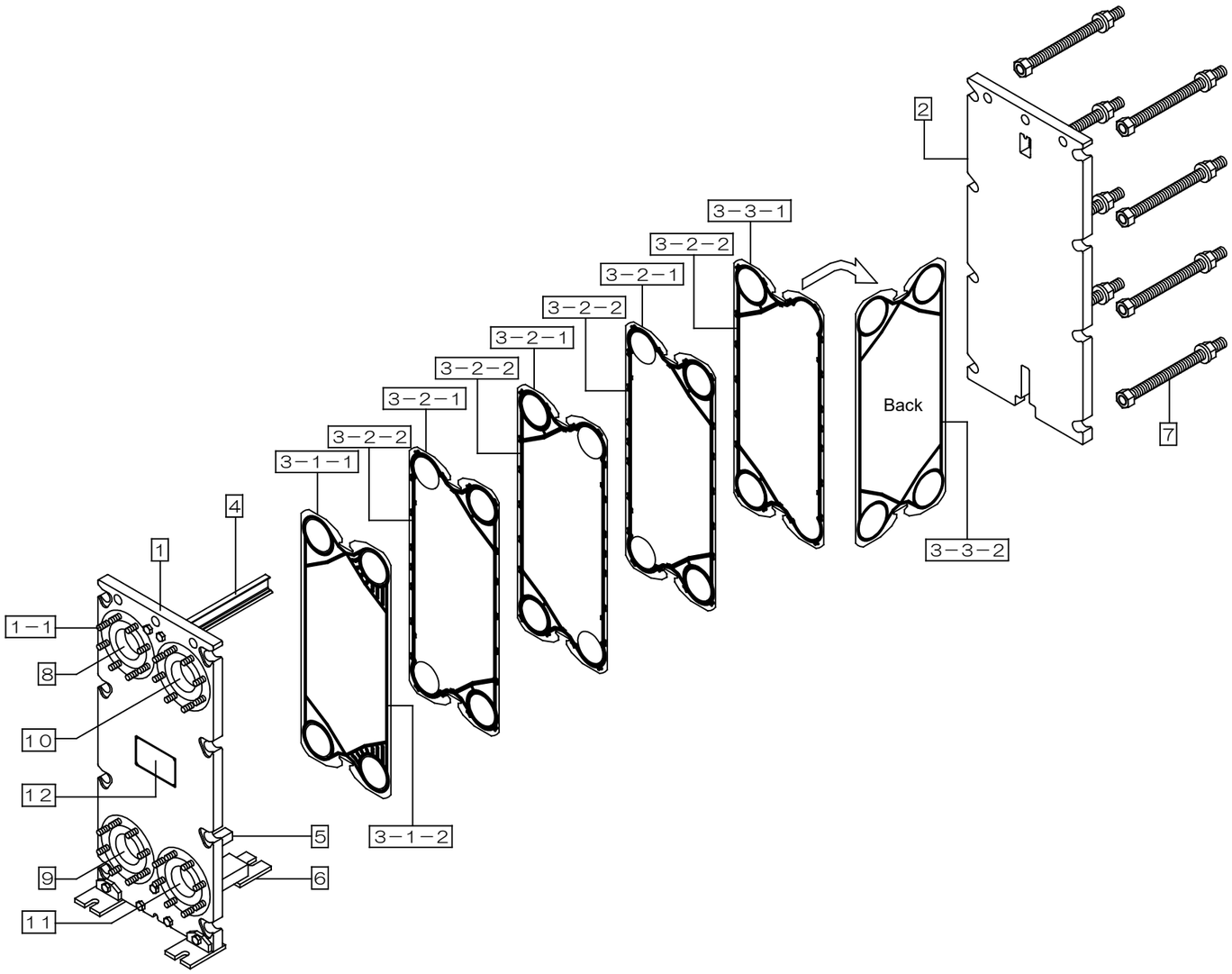

*1. Note: D/E plate gasket types with holes are different from the one without holes.

12	Nameplate
11	S4-Nozzle
10	S2-Nozzle
9	S3-Nozzle
8	S1-Nozzle
7	Tightening bolt and nut
6	Frame support
5	Lower guide bar (Square pipe)
4	Upper guide bar (Rail)
3-3-2	E-Plate gasket *1
3-3-1	E-Plate
3-2-2	Channel gasket
3-2-1	Channel plate
3-1-2	D-Plate gasket *1
3-1-1	D-Plate
3	Heat transfer plates with plate gaskets
2	E-Frame
1-1	Stud bolt and nut
1	S-Frame
Part number	**Part name**

16 Exploded View [e.g.: P-Type Heat Exchanger]

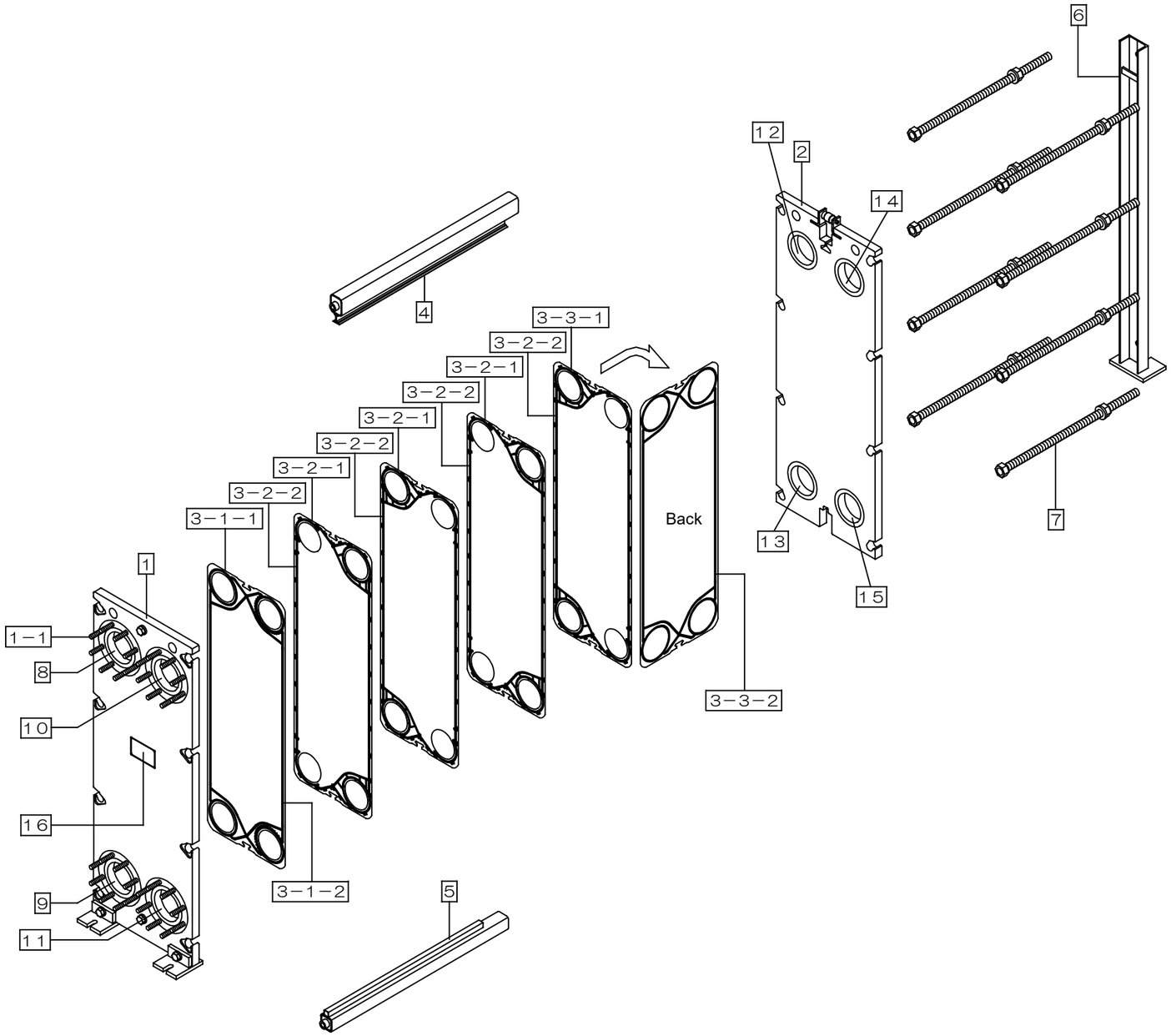

Part number	Part name
16	Nameplate
15	E4-Nozzle
14	E2-Nozzle
13	E3-Nozzle
12	E1-Nozzle
11	S4-Nozzle
10	S2-Nozzle
9	S3-Nozzle
8	S1-Nozzle
7	Tightening bolt and nut
6	Guide bar support
5	Lower guide bar
4	Upper guide bar
3-3-2	E-Plate gasket *1
3-3-1	E-Plate
3-2-2	Channel gasket
3-2-1	Channel plate
3-1-2	D-Plate gasket *1
3-1-1	D-Plate
3	Heat transfer plates with plate gaskets
2	E-Frame
1-1	Stud bolt and nut
1	S-Frame

*1. Note: D/E plate gasket types with holes are different from the one without holes.

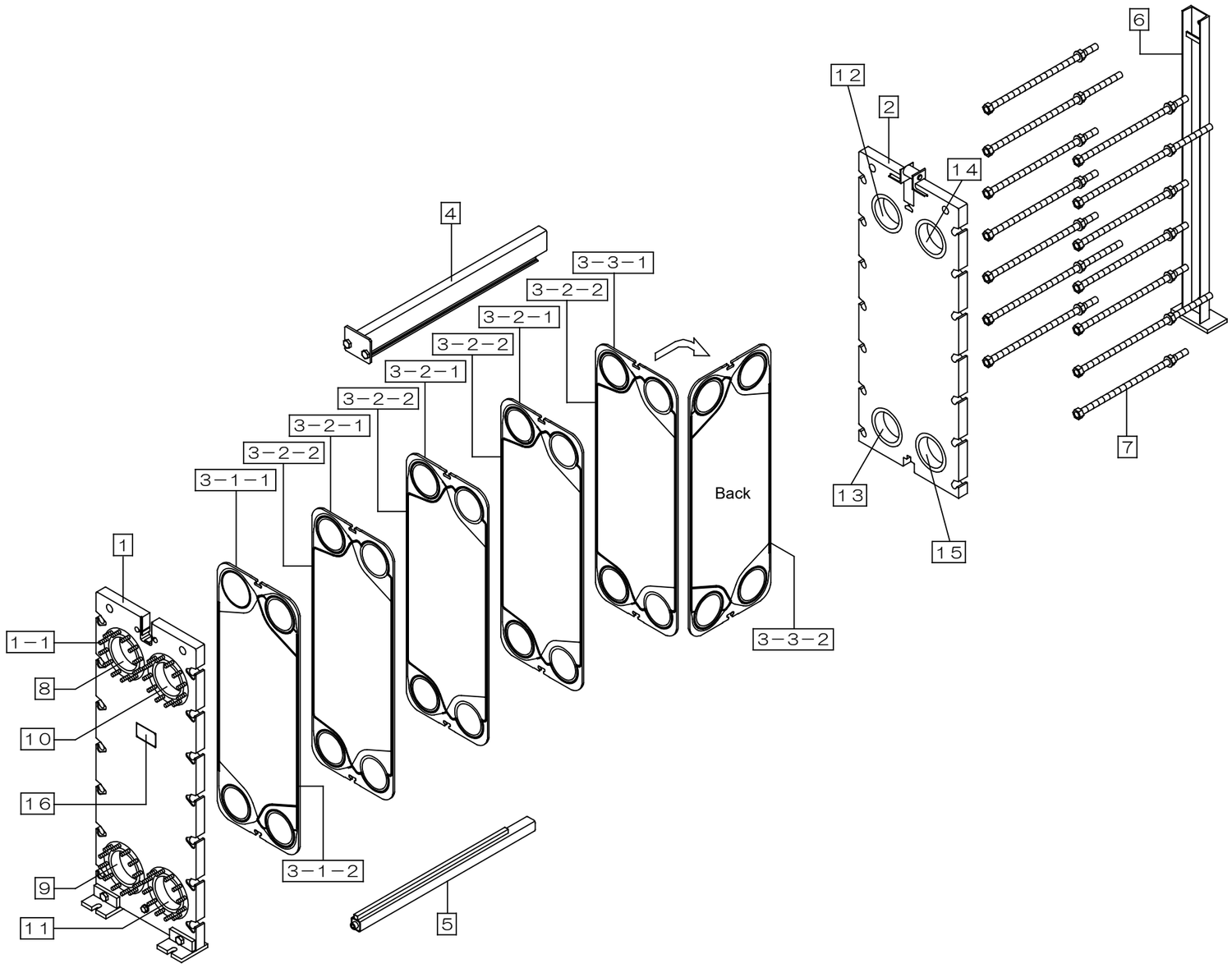

Part number	Part name
16	Nameplate
15	E4-Nozzle
14	E2-Nozzle
13	E3-Nozzle
12	E1-Nozzle
11	S4-Nozzle
10	S2-Nozzle
9	S3-Nozzle
8	S1-Nozzle
7	Tightening bolt and nut
6	Guide bar support
5	Lower guide bar
4	Upper guide bar
3-3-2	E-Plate gasket *1
3-3-1	E-Plate (Cassette) *2
3-2-2	Channel gasket
3-2-1	Channel plate (Cassette)
3-1-2	D-Plate gasket *1
3-1-1	D-Plate (Cassette)
3	Heat transfer plates with plate gaskets
2	E-Frame
1-1	Stud bolt and nut
1	S-Frame

*2. When number of plates is an odd, the end of the heat transfer plate is a single plate, not a cassette.

*1. Note: D/E plate gasket types with holes are different from the one without holes.

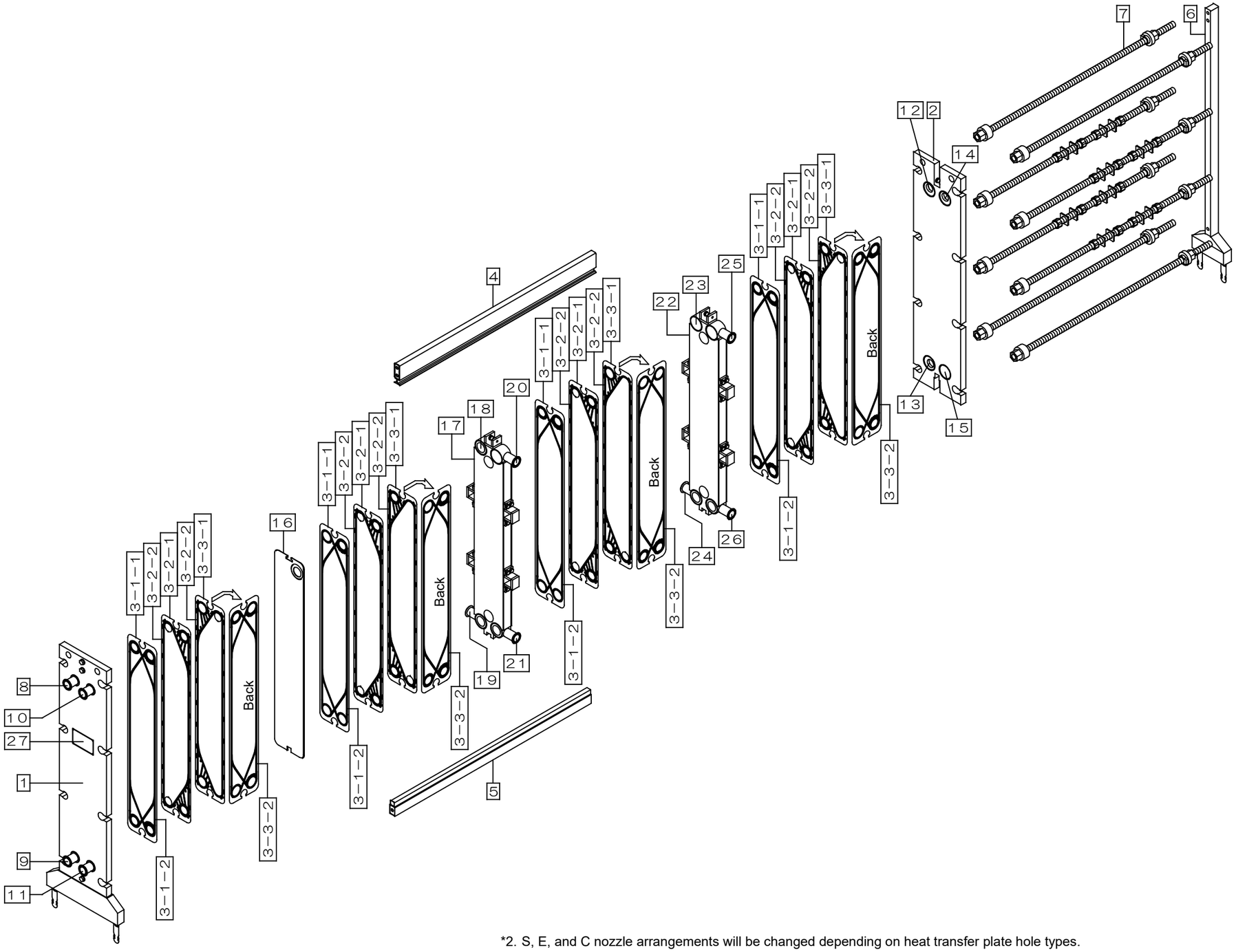

*2. S, E, and C nozzle arrangements will be changed depending on heat transfer plate hole types.

*1. Note: D/E plate gasket types with holes are different from the one without holes.

Part number	Part name	
27	Nameplate	
26	C24-Nozzle	*2
25	C22-Nozzle	*2
24	C23-Nozzle	*2
23	C21-Nozzle	*2
22	C2-Frame	
21	C14-Nozzle	*2
20	C12-Nozzle	*2
19	C13-Nozzle	*2
18	C11-Nozzle	*2
17	C1-Frame	
16	L-Frame	
15	E4-Nozzle	*2
14	E2-Nozzle	*2
13	E3-Nozzle	*2
12	E1-Nozzle	*2
11	S4-Nozzle	*2
10	S2-Nozzle	*2
9	S3-Nozzle	*2
8	S1-Nozzle	*2
7	Tightening bolt and nut	
6	Guide bar support	
5	Lower guide bar	
4	Upper guide bar	
3-3-2	E-Plate gasket	*1
3-3-1	E-Plate	
3-2-2	Channel gasket	
3-2-1	Channel plate	
3-1-2	D-Plate gasket	*1
3-1-1	D-Plate	
3	Heat transfer plates with plate gaskets	
2	E-Frame	
1	S-Frame	

17 Inquiries

Contact info for inquiries

HISAKA WORKS, LTD., Heat Exchanger Div., Sales Department *17-1

Konoike Plant: 2-1-48, Higashi-konoike-cho, Higashi-osaka City, Osaka 578-0973 Japan	Tel : +81-72-966-9601 Fax : +81-72-966-8923	Japan locations
Tokyo Branch office: 1-19-8, Kyobashi, Chuo-ku, Tokyo 104-0031 Japan	Tel : +81-3-5250-0760 Fax : +81-3-3562-2760	

*17-1. Other Japan locations can be referred 2D code.

URL： https://www.hisaka.co.jp/english/company_info/access.html

Global Network

Overseas locations can be referred 2D code. URL： https://www.hisaka.co.jp/english/company_info/access_world.html	Overseas locations

[NOTE]

- Please inform us the "MFG. Number" and "Model" described on the nameplate or Plate Arrangement Drawing and Assembly Drawing.

- For more information

  Hisaka Works, Ltd. official homepage (https://www.hisaka.co.jp/english/).

- Customer's memo

  Please fill in the table below with PHE information.

Company name Contact personnel	
Contact Information	Post code Address Tel/Fax e-mail
Item Number	
MFG. Number	
Model	
Date MFG.	
Maintenance Records	

- Inquiry Details

  Please describe the symptoms of your PHE to lead the better solution.

Location(s) of failure

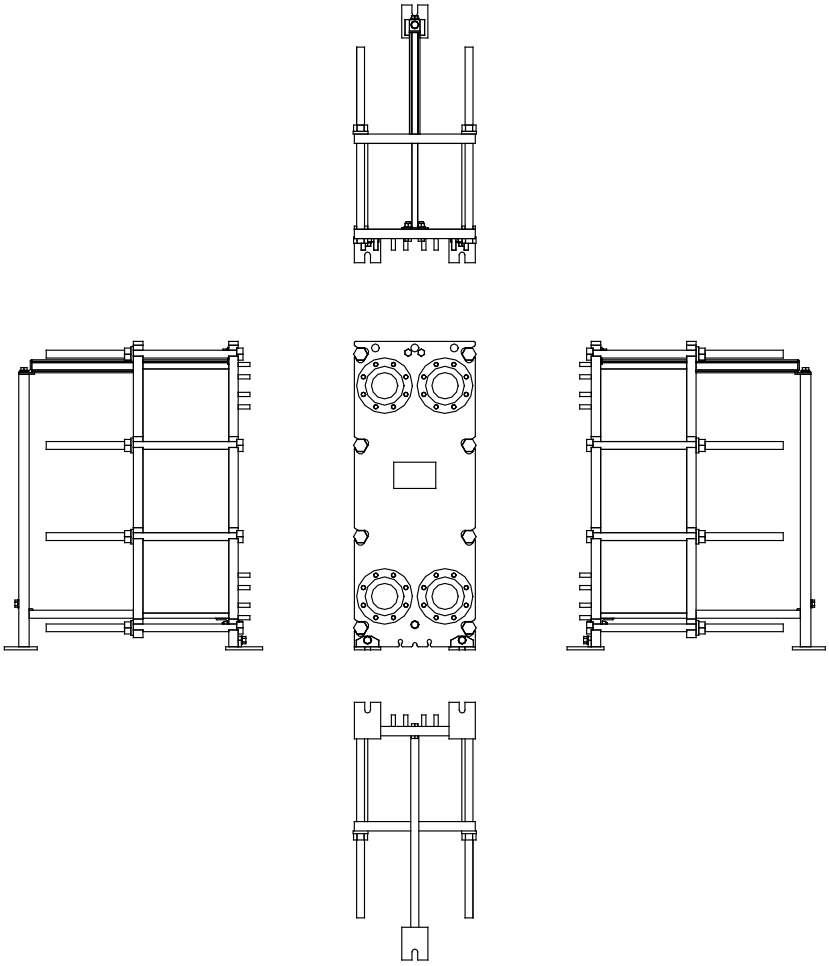

Symptom(s)

HISAKA WORKS, LTD. HEAT EXCHANGER DIVISION

Hisaka Works, Ltd., Heat Exchanger Division acquires both ISO9001 and ISO14001 certification.

HE-ME0013R32